Instructions for use

HOME DELUXE
WIR MACHEN DEIN ZUHAUSE

Wooden bench LORA



Original instructions for use

Designed in Germany

IMPORTANT:
KEEP FOR FUTURE REFERENCE.
READ CAREFULLY!

Table of contents

1. General information 3
1.1. Product overview 3
1.2. General notes 3
1.3. Guarantee 3
2. Information on the instructions for use 4
2.1. Availability of the instructions for use 4
2.2. Target groups of the instructions for use 4
2.3. Information on the translation 4
2.4. Explanation of symbols 4
2.5. General information on the instructions for use 5
2.6. Intended use 5
2.7. General safety instructions 5
3. Product features 6
3.1. Technical data 6
3.2. Product description 7
4. Scope of delivery 7
5. Assembly 8
5.1. Safety instructions 8
5.2. Structure of the product 8
6. Application 10
6.1. Safety instructions 10
6.2. Initial commissioning 10
6.3. Operation 10
6.4. Storage location 10
7. Troubleshooting 10
8. Cleaning and care 11
8.1. Safety instructions 11

9. Dismantling 11
9.1. Safety instructions 11
10. Waste disposal 11
10.1. General information 11

Dear customer,

Thank you for choosing a product from **Home Deluxe GmbH**. We hope you enjoy your new LORA wooden bench.

The instructions for use support you in the installation, commissioning, operation and maintenance of the product. The instructions for use and the safety instructions must be read carefully and in full. Observe these instructions to avoid hazards.

1. General information

1.1. Product overview

Wooden bench LORA| Item ID: 27896| Variant ID: 72637
Wooden bench LORA natural 50 cm- Package 1 of 1| Item ID: 27895 | Variant ID: 72636
Wooden bench LORA Black 50 cm- Package 1 of 1| Item ID: 27892 | Variant ID: 72633
Wooden bench LORA natural 78 cm- Package 1 of 1| Item ID: 27894 | Variant ID: 72636
Wooden bench LORA Black 78 cm- Package 1 of 1| Item ID: 27891 | Variant ID: 72632
Wooden bench LORA natural 110 cm- Package 1 of 1| Item ID: 27893 | Variant ID: 72634
Wooden bench LORA Black 110 cm- Package 1 of 1| Item ID: 27890 | Variant ID: 72631

1.2. General notes

In order to fulfil our claim, we are constantly improving quality, simplifying installation and operation and adapting the products to customer requirements. Due to these changes, the current version of the instructions for use can be found on our homepage.

The term "product" is used in the instructions for use for the "LORA wooden bench".

1.3. Guarantee

The statutory liability for defects and warranty rights apply from the date of purchase.
Home Deluxe GmbH accepts no liability for damage caused by non-compliance with the instructions for use. Complaints arising from improper installation or use are excluded from the warranty. In the event of defects in the product, please contact our customer service in writing, stating the product name, serial number and a photo of the rating plate:

Home Deluxe GmbH
Schanzeweg 2
32312 Lübbecke
Germany
Tel: +49 (0)5743 6181-0
www.home-deluxe-gmbh.de

If you have any further questions, please contact our customer service team using the contact form.

2. Information on the instructions for use

2.1. Availability of the instructions for use

The instructions for use are part of the product and should be kept complete and in the immediate vicinity of the product.

2.2. Target groups of the instructions for use

The instructions for use must be read and observed by every person involved in one of the following activities or uses:

- Unpacking
- Assembly / Installation
- Commissioning / Operation
- Maintenance / inspection / care
- Troubleshooting / repair
- Waste disposal

2.3. Information on the translation

The original instructions for use were written in German. Any other language available is a translation of the German version.

2.4. Explanation of symbols

Symbol	Explanation of symbols
	**WARNING** The symbol indicates possible dangers that could result in fatal or serious injuries. Before carrying out the corresponding installation or application step, read the corresponding note.
	**INFO / NOTE** The symbol provides important information and indicates material damage. Observe these before carrying out the corresponding installation or application step in order to understand problems and avoid damage.
	**Read instructions for use** The symbol indicates that the operating instructions must be read carefully before mounting/installing and/or operating the appliance.
	**Fragile** The symbol indicates that the product is fragile.

2.5. General information on the instructions for use

The instructions for use refer to the LORA wooden bench. It contains important information on assembly, operation, maintenance and cleaning. The instructions for use, in particular the safety instructions, must be read carefully before using the product; keep the instructions for use in a safe place. Only use the product as described in these instructions for use to prevent accidental injury or damage. If you pass the product on to third parties, these instructions for use must also be handed over.

2.6. Intended use

The product is of high quality, durable and intended or suitable exclusively for private use to a reasonable and customary extent. Furthermore, our product is **not** intended for commercial use.
The product is designed as a bench for indoor and outdoor use.
Only use the product as described in these instructions for use. Any other use is considered improper and may result in damage to property or personal injury. The manufacturer accepts no liability for damage caused by improper or incorrect use.

2.7. General safety instructions

General hazard warnings



- Improper handling can lead to considerable personal injury and damage to property.
- **Only** install the product if the scope of delivery is complete and in perfect condition.
- Ensure that all parts are undamaged and correctly installed. There is a risk of injury if they are not installed correctly. Damaged parts can affect safety and function.
- Protective equipment fitted by the manufacturer must not be removed.
- Only place the product on a safe, level and firm surface.
- Do not make any changes to the product.
- Check the fastening at regular intervals.
- Always keep the product dry and away from liquids.
- Repairs may only be carried out after consultation with customer service and in accordance with instructions, otherwise all warranty claims will be invalidated.

Danger for children



- Keep children away from packaging materials. There is a risk of suffocation!
- Keep children away from the assembly site while the product is being assembled. The scope of delivery contains small parts that can be swallowed or cause serious injury.
- **Risk of tipping over!** The product is not a children's toy, climbing wall or sports equipment. The individual elements of the product can topple over when loaded on one side, which can result in death.
- Children can injure themselves when playing with the product or when pulling up on the product.
- Explain to the children how to use the product correctly and never leave them unsupervised while playing.
- Make sure that small children do not put small parts in their mouths.

Risk of injury
Improper handling of the product can lead to injuries



- Do not make any design changes to the product. Any modifications must be authorised in writing by the manufacturer and carried out in accordance with the instructions.
- If the product is damaged, it must no longer be used. Damaged parts must be repaired or replaced with original spare parts.
- Ensure that the product is permanently installed securely to avoid injury.

Risk of damage



- Improper handling of the product can lead to damage.
- Do not open the packaging with sharp objects (e.g. knives, scissors or similar) as this may damage the product. Be careful when opening.
- Do not use the product near sources of heat or naked flames.
- Protect the product from direct light and sunlight.
- To avoid discolouration of the fabric, the product should be placed at least 40 cm away from radiators and any heat sources.
- Do not place the product directly against a wall; keep a distance of at least 30 cm from walls.

Explosion hazard



- **Caution**: Do not store highly flammable, combustible or explosive substances inside the product. Highly flammable substances can catch fire.

3. Product features

3.1. Technical data

Wooden bench LORA	**50 cm**	**78 cm**	**110 cm**
Dimensions (W x D x H)	50 x 40 x 42 cm	78 x 40 x 42 cm	110 x 40 x 42 cm
Colour	Nature, black	Nature, black	Nature, black
Material	Pine wood	Pine wood	Pine wood
Wood thickness	2.3 cm	2.3 cm	2.3 cm
Weight	6.9 kg	8.3 kg	9.8 kg

3.2. Product description

Set stylish accents with the LORA bench in elegant black!

Made from high-quality pine wood and finished with an environmentally friendly, water-based paint, this bench impresses with its minimalist design and modern look. The clear, horizontal wooden panels give the bench a structured, architectural look, while the deep matt black colour brings a contemporary elegance to any room. Whether in the entrance area, as a seat in the dining room or as a decorative element on the patio - LORA adapts stylishly to any interior design concept.

Available in three different lengths, LORA offers you a wide range of uses - from compact hallway solutions to spacious benches in the dining area or garden. Robust, modern and timeless - the perfect choice for design lovers.

4. Scope of delivery

Check the packaging for external damage on delivery. Furthermore, immediately after unpacking, check that the scope of delivery is complete and that the product and all components are in perfect condition. Only assemble the product if the scope of delivery is complete and undamaged.

Wooden bench LORA

No.	Description of the	Quantity	Picture
1	Bench seat	1	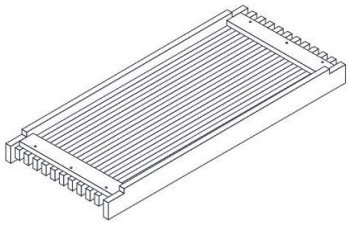
2	Frame	2	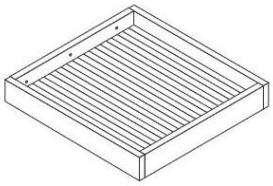
A	Screw 6 x 30 mm	6	
B	Screw 3.5 x 16 mm	16	
C	Angle connector	4	
D	Cover	4	

5. Assembly

5.1. Safety instructions

All health and safety information must be read.

Risk of injury
Improper handling during installation can lead to injuries

- The number of parcels may vary depending on the order. Please ensure that the parcels are opened at the top. Be very careful when opening the parcels.
- Immediately after unpacking, check that the scope of delivery is complete and that the product and all parts are in perfect condition.
- **Only** install the product if the scope of delivery is complete and in perfect condition.
- Only place the product on a safe, level and firm surface.
- Operating errors, assembly errors or damage caused by assembly are excluded from the warranty.
- At least 2 people are required to assemble the product.
- Wear protective clothing such as safety shoes and protective gloves during assembly.
- **We would like to point out that Home Deluxe GmbH does not assume any costs for installation or manual services - such as electrician costs or comparable specialist costs.**

5.2. Structure of the product

The product is delivered disassembled and can be assembled with little effort. Follow the assembly instructions carefully. If the instructions are not followed, the function and safety of the product cannot be guaranteed.

Tools required

	Cutter knife		Measuring tape
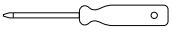	Screwdriver		

NOTE

- The following instructions must be read carefully.
- During installation, individual components must be tilted. When tilting, ensure that they are resting on a soft surface (e.g. a blanket) to prevent damage to the cover.
- Mount the product in the position where it will be installed.
- The assembly material and accessories are included in the elements / boxes.

Wooden bench structure LORA

Illustration	Build-up step
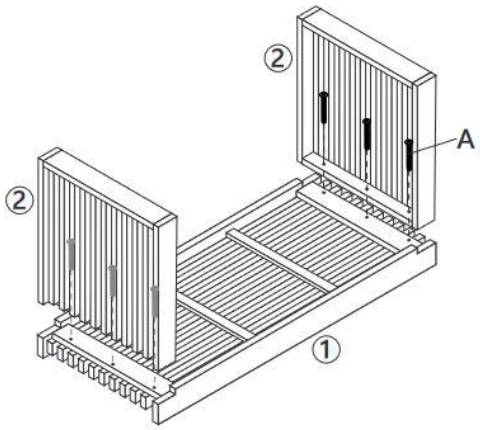	- Fit the two frames (**2**) to the seat bench (**1**).
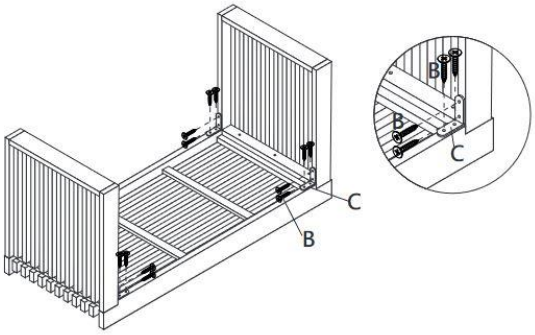	- Screw the two components together with the angle connector (**C**) and screws (**B**).
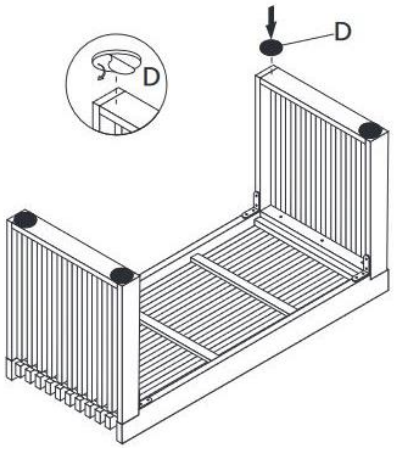	- Glue the covers to the frame underneath.
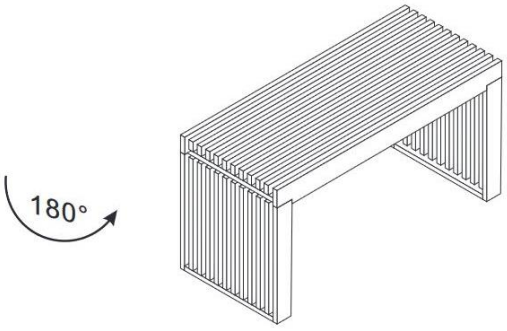	- Turn the bench seat over and the assembly is complete.

6. Application

6.1. Safety instructions

The following health and safety information must be read carefully.

Risk of injury
Improper handling during operation can lead to injuries



- Do not use a damaged product.
- Do not make any changes to the product.
- **Risk of tipping and falling!** The product is not a children's toy, climbing wall or sports equipment. The individual elements of the product can topple over when loaded on one side, which can result in death.
- Children can injure themselves when playing with the product or when pulling up on the product.
- **Risk of suffocation!** Ensure that no children or animals are in the vicinity during assembly.
- Check the product for visible damage before each use.
- Check the connections and fastening at regular intervals.

6.2. Initial commissioning

Check the product for damage before using it for the first time. The product may only be used if it is undamaged.

6.3. Operation

Check before using the product,

- the proper condition.
- that the frames are firmly connected.

6.4. Storage location



- Only store the product in dry, weather-protected and well-ventilated rooms.

7. Troubleshooting

If the following faults occur during operation, please check the following fault causes using the following table. If the fault cannot be rectified by the measures listed, take the product out of operation.

Error	Possible cause	Solution
The product wobbles or vibrates	- The product stands on uneven surfaces	- Place the product on a level surface
	- The frame has come loose	- Tighten the frame

If another problem occurs with the product, please contact us.

8. Cleaning and care

8.1. Safety instructions

Risk of injury
Improper handling during operation can lead to damage



- Remove all dirt as quickly as possible. (the longer you wait, the more difficult it is to remove the dirt).
- To remove unwanted dirt or hair, simply vacuum the product.
- Regular care can prevent persistent odours.
- Clean and care for the product regularly, regardless of visible stains.

9. Dismantling

9.1. Safety instructions

Risk of injury
Improper handling during disassembly can lead to injuries



- Secure the product against falling before dismantling.

Disassembly of the product must be carried out in reverse order to assembly. (**see chapter Assembly**)

10. Waste disposal

10.1. General information



- Dispose of the product and all components in accordance with local and country-specific regulations to prevent damage to the environment.
- Our packaging is made from environmentally friendly materials. They can be recycled and thus serve as valuable raw materials. Dispose of the packaging material (cardboard, dirty packaging, etc.) separately and professionally in accordance with the applicable national regulations.
- Contact the manufacturer if you are unsure about disposal.
- You can also obtain information on proper disposal from the local waste disposal centres

Home Deluxe GmbH
Schanzeweg 2
32312 Lübbecke
Germany
Tel: +49 (0)5743 6181-0
www.home-deluxe-gmbh.de

ga-421-00-lora
2025/05